MR23 Circular connector

160V/125V- 7A

Technical characteristics

Specifications		
Specifications	DIN EN 60 664 DIN EN 61 984	
Approvals		

Electrical data			Mechanical date	
Number of contacts	12	17	Housing material	copper alloy,zinc alloy
Rated current	7A	7A	Housing surface	Nickel-plated
mm^2/ AWG	(0.03-1.0 mm^2	/ AWG 32-18)	Contact resistance	≤ 5 mΩ
Rated voltage	160 V	125 V	Insulating bodies	PBT
Rated impulse voltage	2.5 kV	2.0 kV	Contact material	copper alloy
Pollution degree	3	3	Contact surface	gold plated
Flammability acc. to UL 94	V0 (UL94)	V0 (UL94)	Mechanical working life	>500
Overvoltage categorie	III	III	Degree of protection	IP67
			Limiting temperature	-40°C ...+130°C

Forward coding, Crimp terminal

order crimp contacts separately

Contacts	Designation	Order No.
12	MR23-012-BKP26-SE	181 012 600 3001
17	MR23-017-BKP26-SE	181 017 600 2003
12	MR23-012-BKP26-SE-OD3.2	181 000 099 2501
17	MR23-017-BKP26-SE-OD3.2	181 017 600 3004
12	MR23-012-BKP28.8-SE	181 012 600 2001
17	MR23-017-BKP28.8-SE	181 017 600 2001

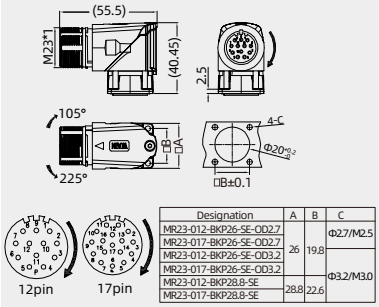

Designation	A	B	C
MR23-012-BKP26-SE-OD2.7	26	19.8	Φ2.7/M2.5
MR23-017-BKP26-SE-OD2.7			
MR23-012-BKP26-SE-OD3.2			Φ3.2/M3.0
MR23-017-BKP26-SE-OD3.2			
MR23-012-BKP28.8-SE	28.8	22.6	
MR23-017-BKP28.8-SE			

Reverse coding, Crimp terminal

order crimp contacts separately

Contacts	Designation	Order No.
12	MR23-012R-BKP26-SE	181 012 600 3002
17	MR23-017R-BKP26-SE	181 017 600 2004
12	MR23-012R-BKP26-SE-OD3.2	181 012 600 3004
17	MR23-017R-BKP26-SE-OD3.2	181 000 099 2500
12	MR23-012R-BKP28.8-SE	181 012 600 2002
17	MR23-017R-BKP28.8-SE	181 017 600 2002

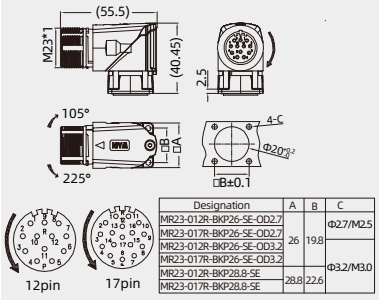

Designation	A	B	C
MR23-012R-BKP26-SE-OD2.7	26	19.8	Φ2.7/M2.5
MR23-017R-BKP26-SE-OD2.7			
MR23-012R-BKP26-SE-OD3.2			Φ3.2/M3.0
MR23-017R-BKP26-SE-OD3.2			
MR23-012R-BKP28.8-SE	28.8	22.6	
MR23-017R-BKP28.8-SE			

Crimp contacts

Crimp contacts 9A

9A

NO.	Wire gauge(mm^2)	Male	Order No.
①	0.03-0.34	M23-MC9G-0.34	101 031 210 2501
②	0.14-1.0	M23-MC9G-1.0	101 031 210 0801

NO.	Wire gauge(mm^2)	Female	Order No.
①	0.03-0.34	M23-FC9G-0.34	101 031 220 2501
②	0.14-1.0	M23-FC9G-1.0	101 031 220 0801

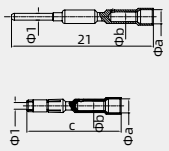

NO.	Φa	Φb	Stripping Length
①	1.7	0.9	4mm
②	2.1	1.45	4mm

NO.	Φa	Φb	c	Stripping Length
①	1.7	0.9	14	4mm
②	2.1	1.45	14	4mm

Tools

Crimping tool

Wire gauge	Designation	Order No.
0.14-4 mm^2	TL28-2	198 001 001 0039

Notes: The tools for crimp terminal may influence the product quality and stability. Please select the tools recognized by our company.